Salò
ART | DESIGN

Please note that the dimensions
are given in millimeters.

Part Number:
1137-96

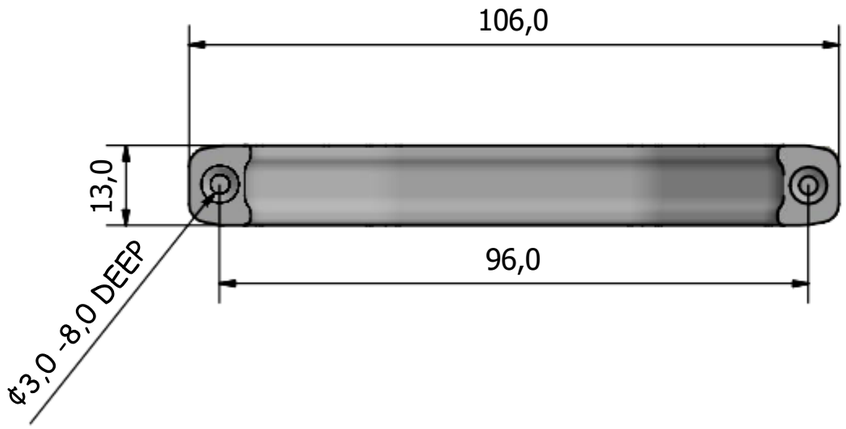

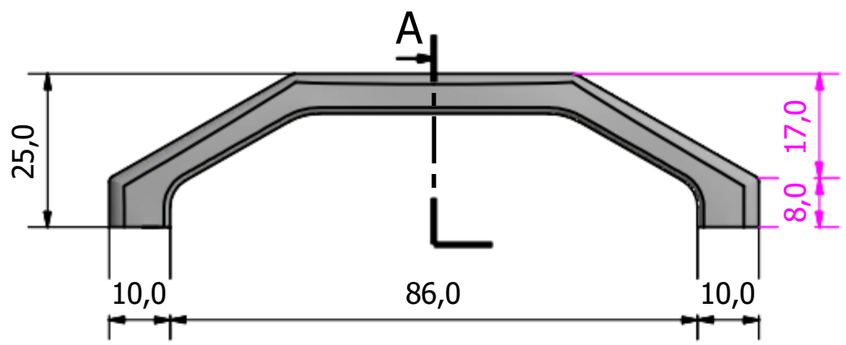

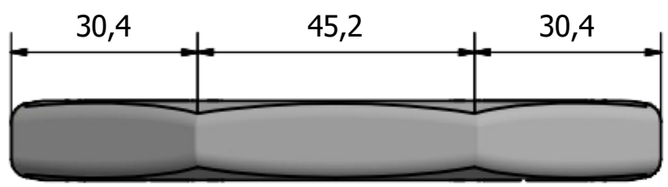

A-A (1 : 1)