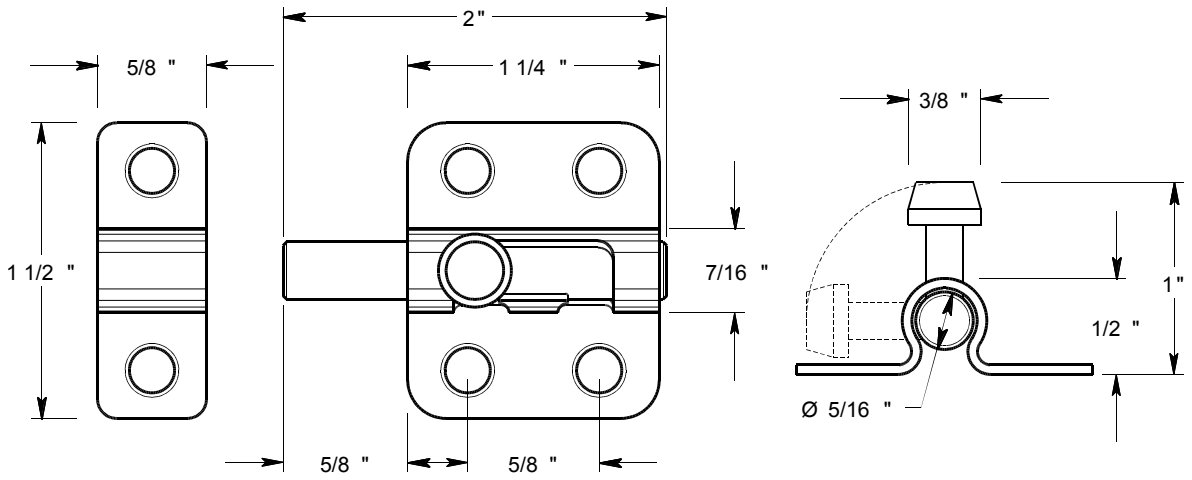
2"
5/8 "
1 1/4 "
1 1/2 "
7/16 "
5/8 "
5/8 "
3/8 "
1"
1/2 "
Ø 5/16 "