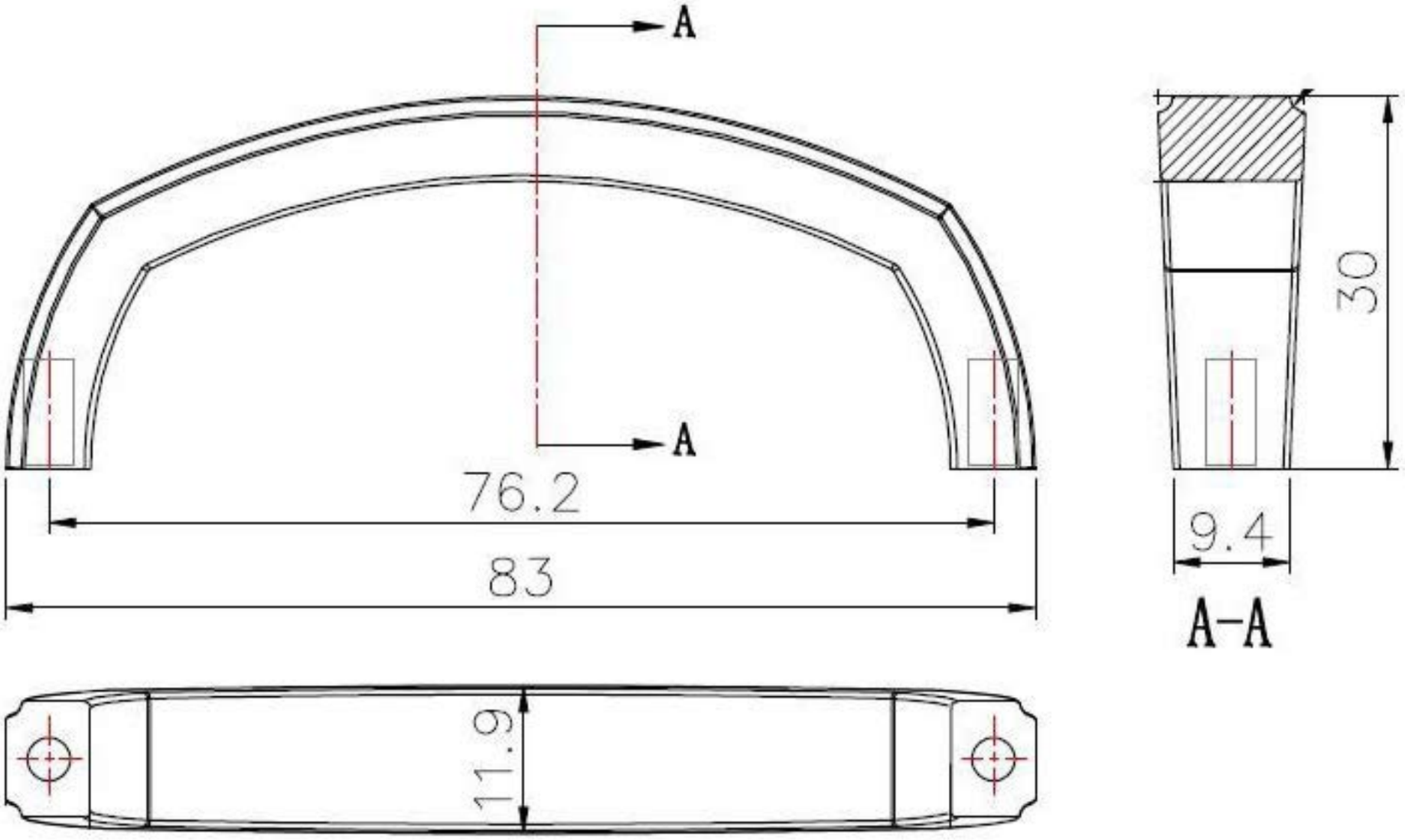
A
A
76.2
83
30
9.4
A-A
11.9