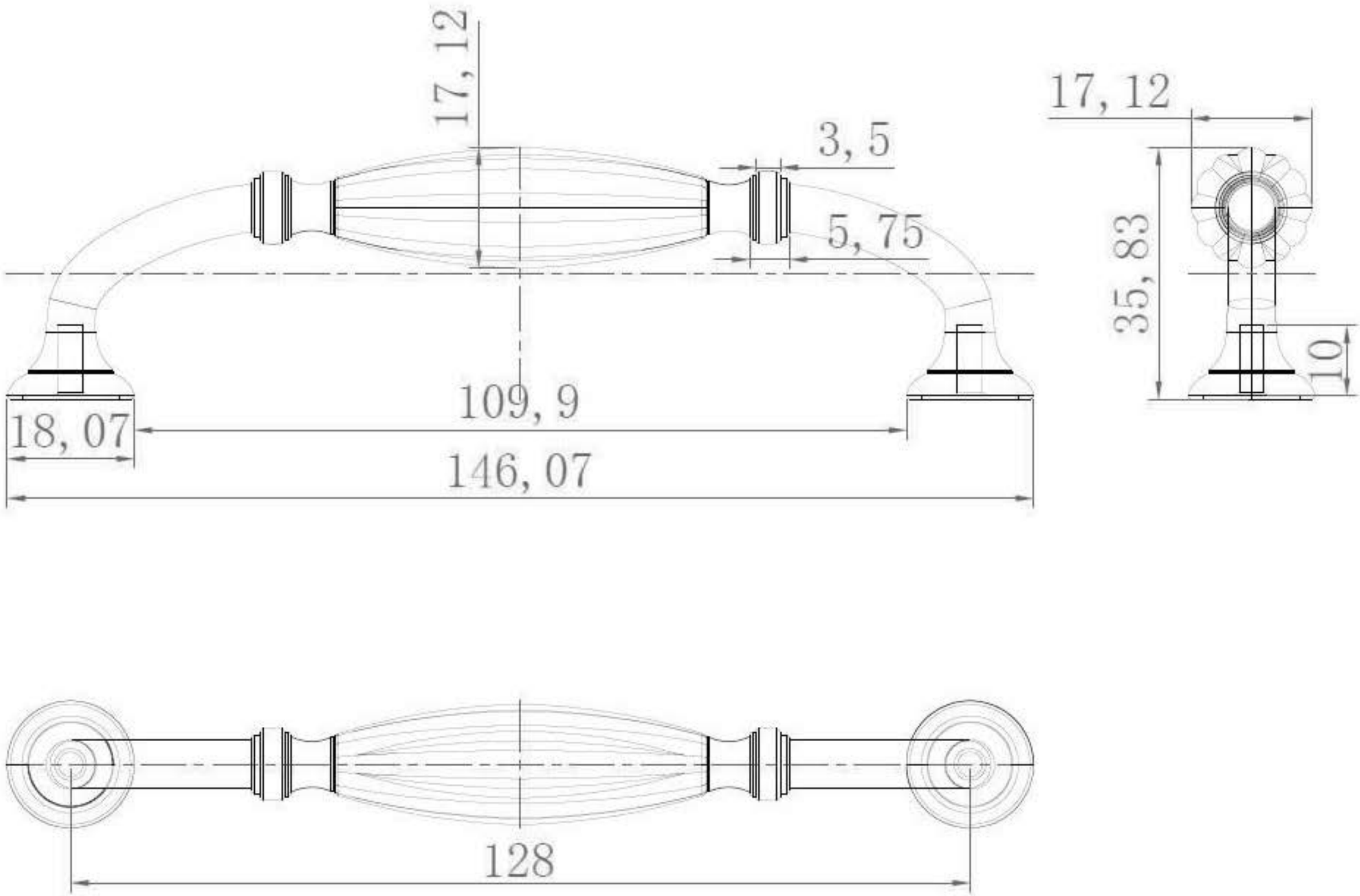
17, 12
3, 5
5, 75
17, 12
35, 83
10
109, 9
18, 07
146, 07
128