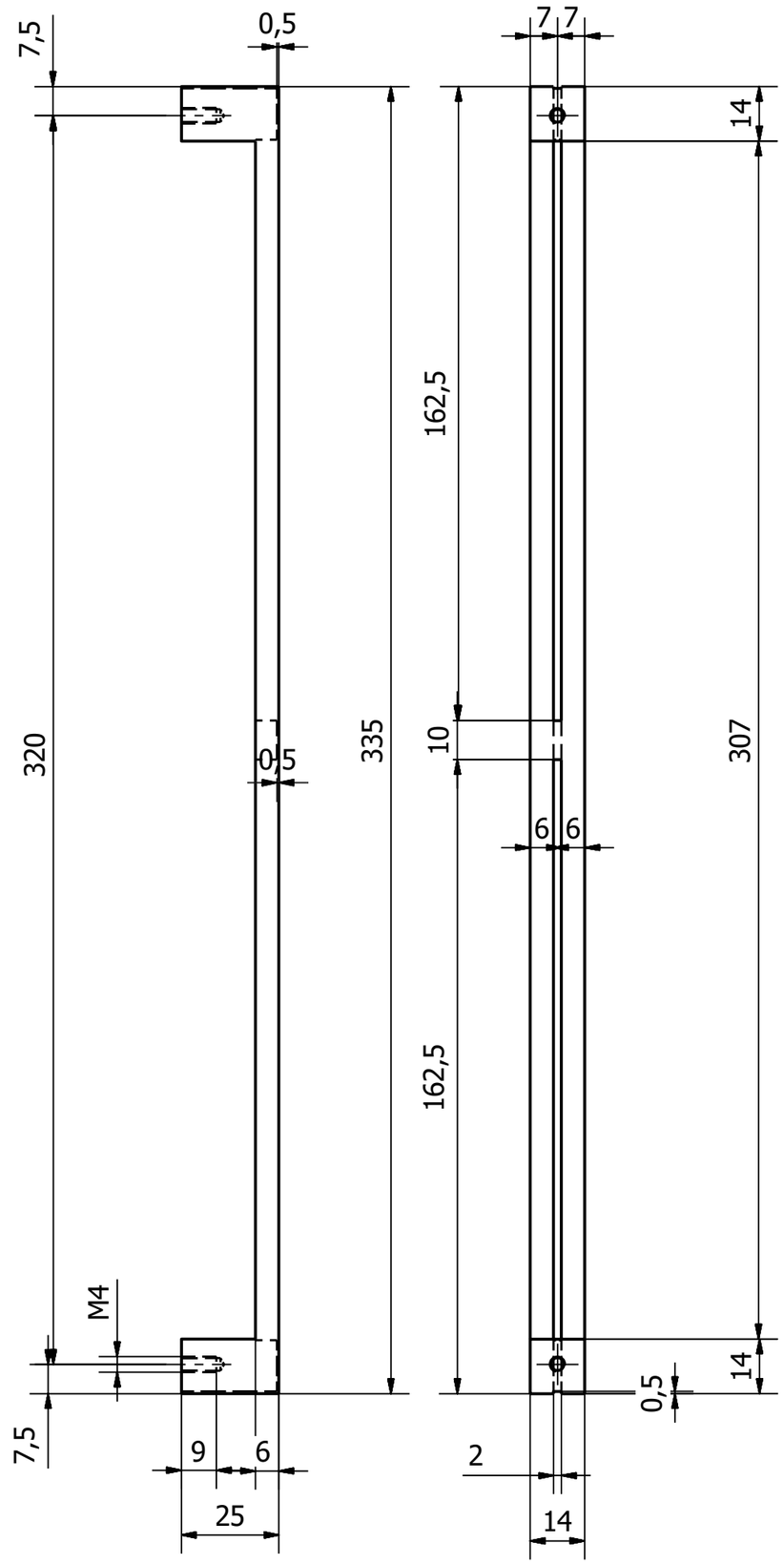


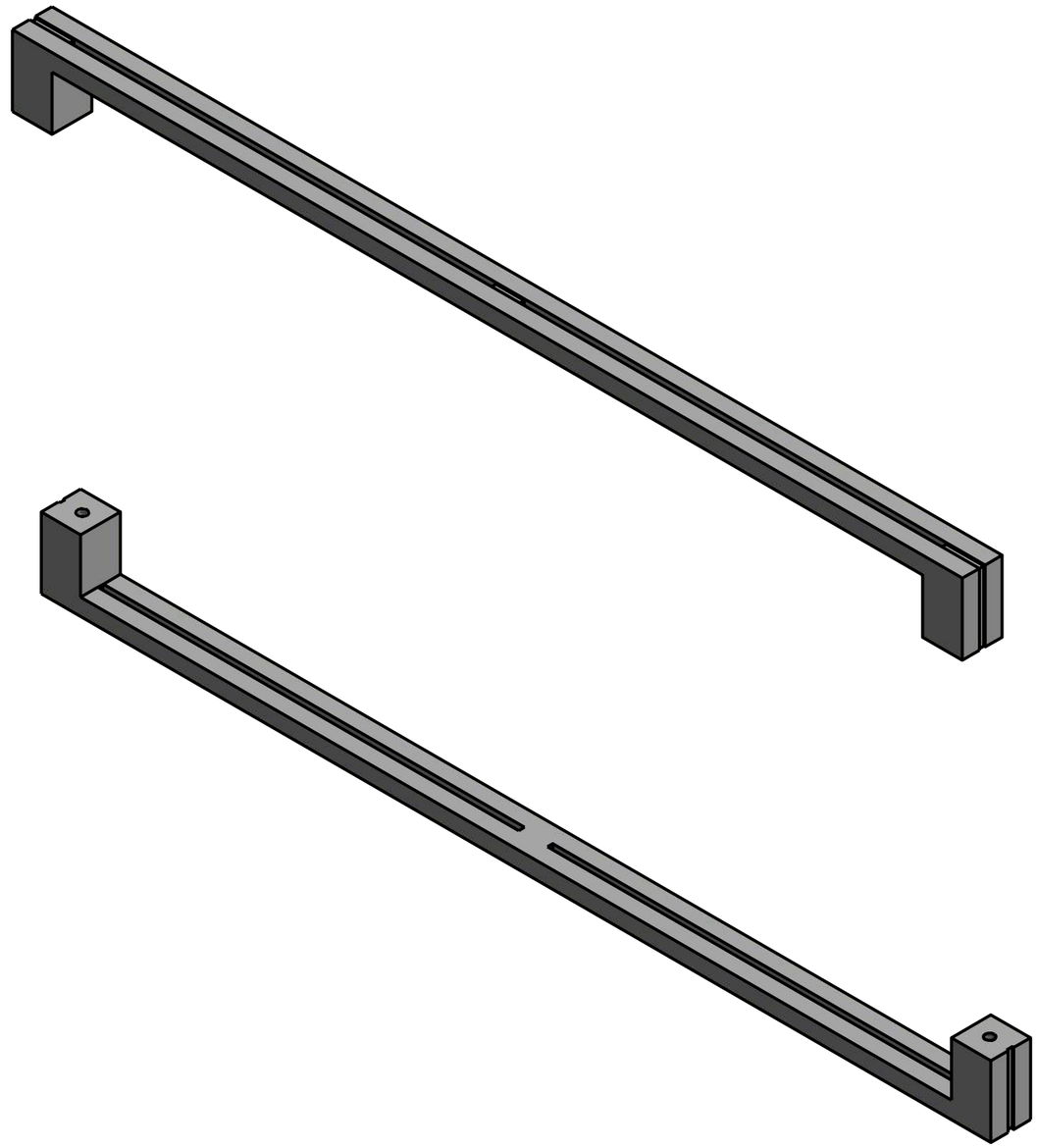

ART | DESIGN

Please note that the dimensions above are given in millimeters.

**Part Number:**
**1136 -320**